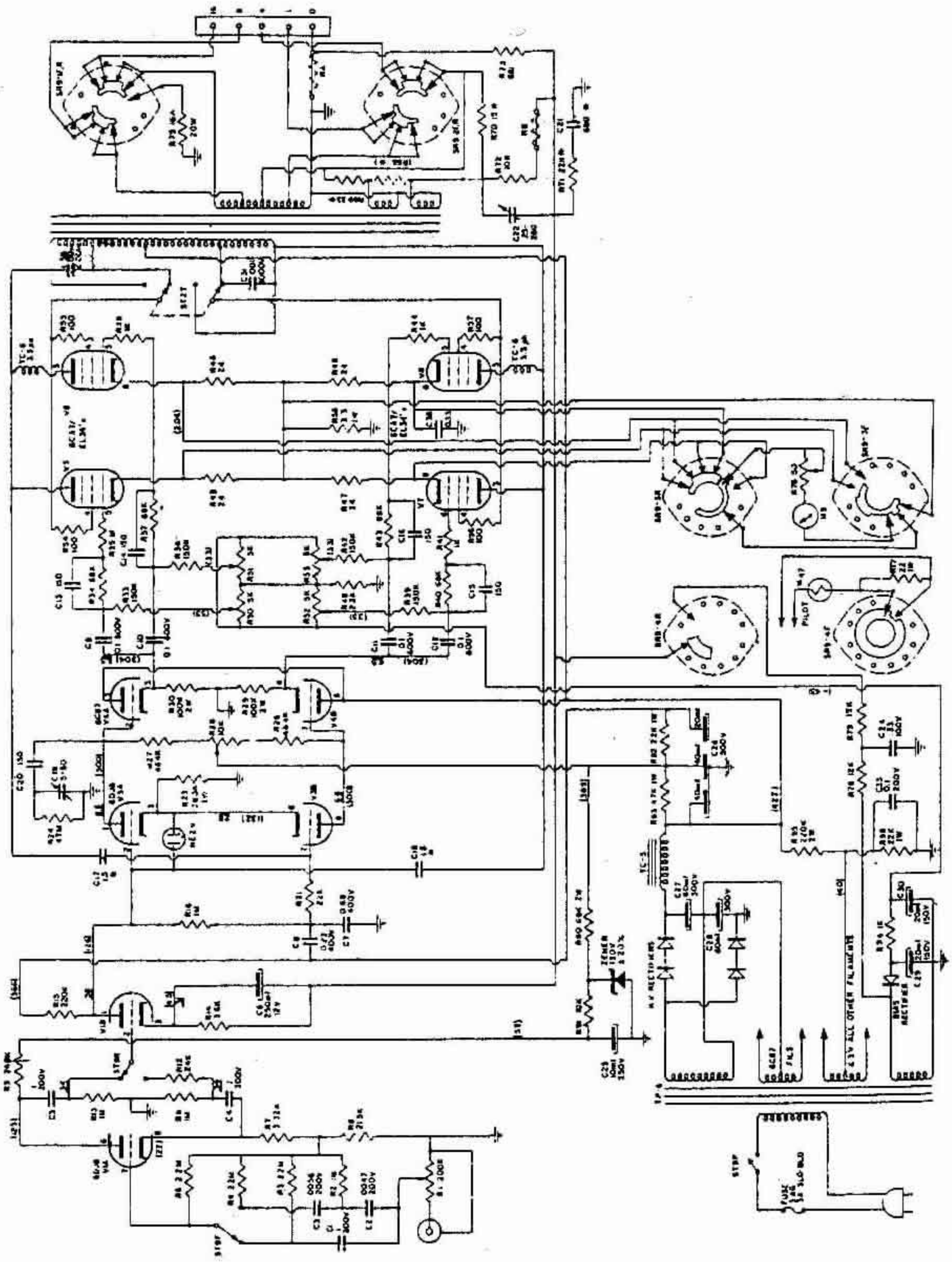MARANTZ 9