Marantz 10B

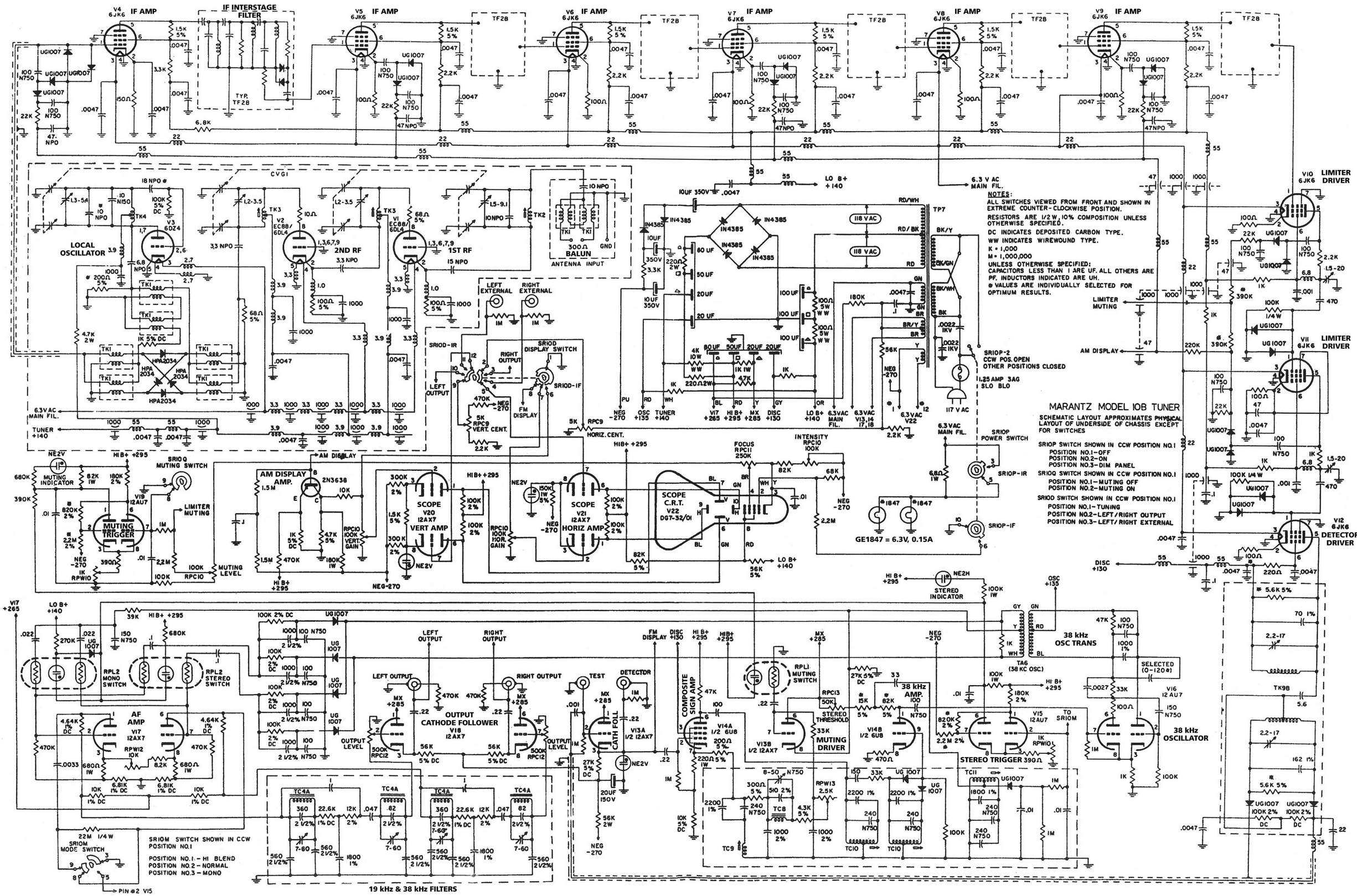
IF AMP
IF INTERSTAGE FILTER
LOCAL OSCILLATOR
2ND RF
1ST RF
ANTENNA INPUT
BALUN
LIMITER DRIVER
DETECTOR DRIVER
MARANTZ MODEL 10B TUNER
SCHEMATIC LAYOUT APPROXIMATES PHYSICAL LAYOUT OF UNDERSIDE OF CHASSIS EXCEPT FOR SWITCHES
SRIOP SWITCH SHOWN IN CCW POSITION NO.1
POSITION NO.1-OFF
POSITION NO.2-ON
POSITION NO.3-DIM PANEL
SRIOQ SWITCH SHOWN IN CCW POSITION NO.1
POSITION NO.1-MUTING OFF
POSITION NO.2-MUTING ON
SRIOD SWITCH SHOWN IN CCW POSITION NO.1
POSITION NO.1-TUNING
POSITION NO.2-LEFT/RIGHT OUTPUT
POSITION NO.3-LEFT/RIGHT EXTERNAL
NOTES:
ALL SWITCHES VIEWED FROM FRONT AND SHOWN IN EXTREME COUNTER-CLOCKWISE POSITION.
RESISTORS ARE 1/2 W, 10% COMPOSITION UNLESS OTHERWISE SPECIFIED.
DC INDICATES DEPOSITED CARBON TYPE.
WW INDICATES WIREWOUND TYPE.
K = 1,000
M = 1,000,000
UNLESS OTHERWISE SPECIFIED:
CAPACITORS LESS THAN 1 ARE UF. ALL OTHERS ARE PF. INDUCTORS INDICATED ARE UH.
* VALUES ARE INDIVIDUALLY SELECTED FOR OPTIMUM RESULTS.
SCOPE C.R.T. V22 DG7-32/01
SCOPE V20 12AX7 VERT AMP
SCOPE V21 12AX7 HORIZ AMP
AM DISPLAY AMP.
MUTING TRIGGER
AF AMP V17 12AX7
OUTPUT CATHODE FOLLOWER V18 12AX7
COMPOSITE SIGN AMP
STEREO TRIGGER
38 kHz OSC TRANS
38 kHz OSCILLATOR
19 kHz & 38 kHz FILTERS
SRIOM SWITCH SHOWN IN CCW POSITION NO.1
POSITION NO.1 - HI BLEND
POSITION NO.2 - NORMAL
POSITION NO.3 - MONO
GE1847 = 6.3V, 0.15A
1.25 AMP 3AG SLO BLO