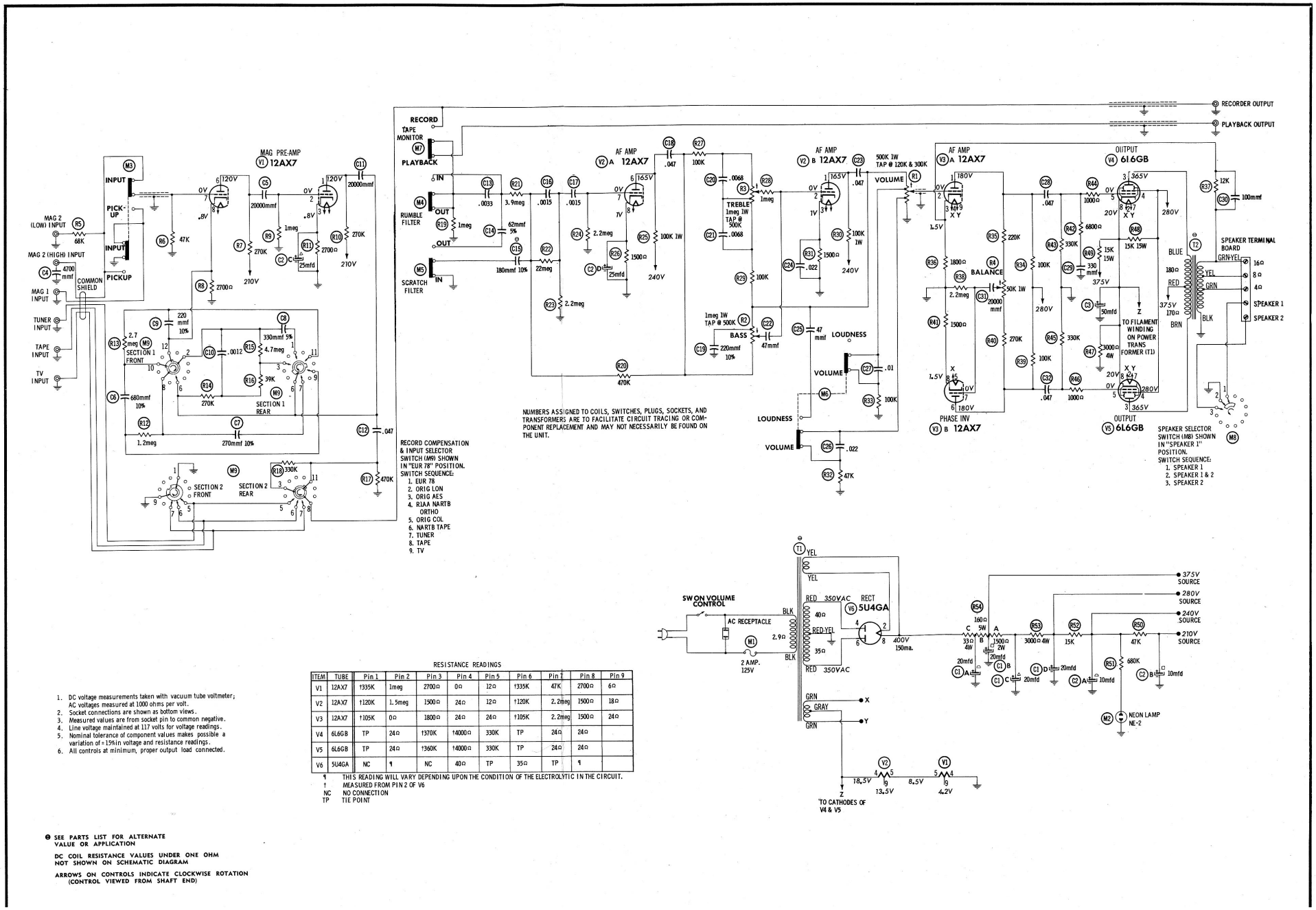

RESISTANCE READINGS

ITEM	TUBE	Pin 1	Pin 2	Pin 3	Pin 4	Pin 5	Pin 6	Pin 7	Pin 8	Pin 9
V1	12AX7	†335K	1meg	2700Ω	0Ω	12Ω	†335K	47K	2700Ω	6Ω
V2	12AX7	†120K	1.5meg	1500Ω	24Ω	12Ω	†120K	2.2meg	1500Ω	18Ω
V3	12AX7	†105K	0Ω	1800Ω	24Ω	24Ω	†105K	2.2meg	1500Ω	24Ω
V4	6L6GB	TP	24Ω	†370K	†4000Ω	330K	TP	24Ω	24Ω	
V5	6L6GB	TP	24Ω	†360K	†4000Ω	330K	TP	24Ω	24Ω	
V6	5U4GA	NC	¶	NC	40Ω	TP	35Ω	TP	¶	

¶ THIS READING WILL VARY DEPENDING UPON THE CONDITION OF THE ELECTROLYTIC IN THE CIRCUIT.
† MEASURED FROM PIN 2 OF V6
NC NO CONNECTION
TP TIE POINT

1. DC voltage measurements taken with vacuum tube voltmeter; AC voltages measured at 1000 ohms per volt.
2. Socket connections are shown as bottom views.
3. Measured values are from socket pin to common negative.
4. Line voltage maintained at 117 volts for voltage readings.
5. Nominal tolerance of component values makes possible a variation of ±15% in voltage and resistance readings.
6. All controls at minimum, proper output load connected.

⊖ SEE PARTS LIST FOR ALTERNATE VALUE OR APPLICATION

DC COIL RESISTANCE VALUES UNDER ONE OHM NOT SHOWN ON SCHEMATIC DIAGRAM

ARROWS ON CONTROLS INDICATE CLOCKWISE ROTATION (CONTROL VIEWED FROM SHAFT END)

H. H. SCOTT
MODEL 99-D